GENERAL SPECIFICATIONS, MODEL 750

COUNTRY OF ORIGIN: USA

SIZE (APPROX) 17.12W X 12.38H X 18.50 D

SHIPPING WEIGHT: 26 LBS (12 KG)

ELECTRICAL: 110/120VAC, 50/60 HZ, 4 AMP FUSE

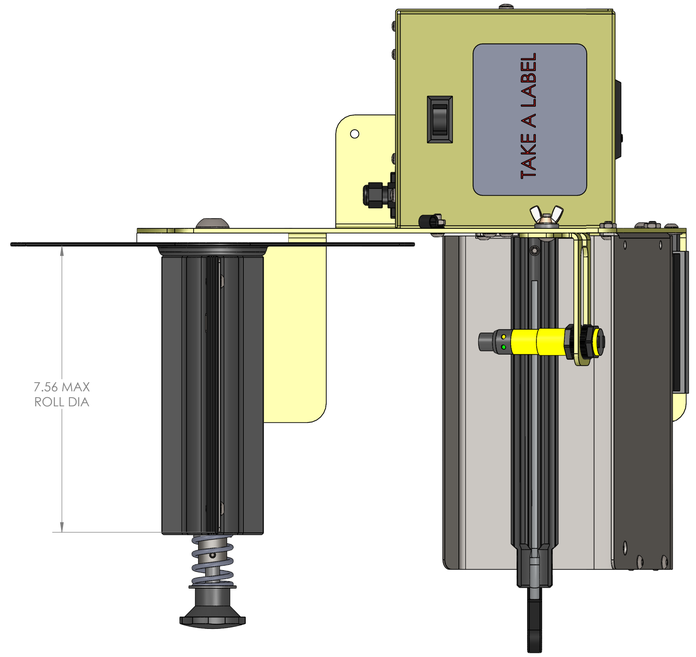

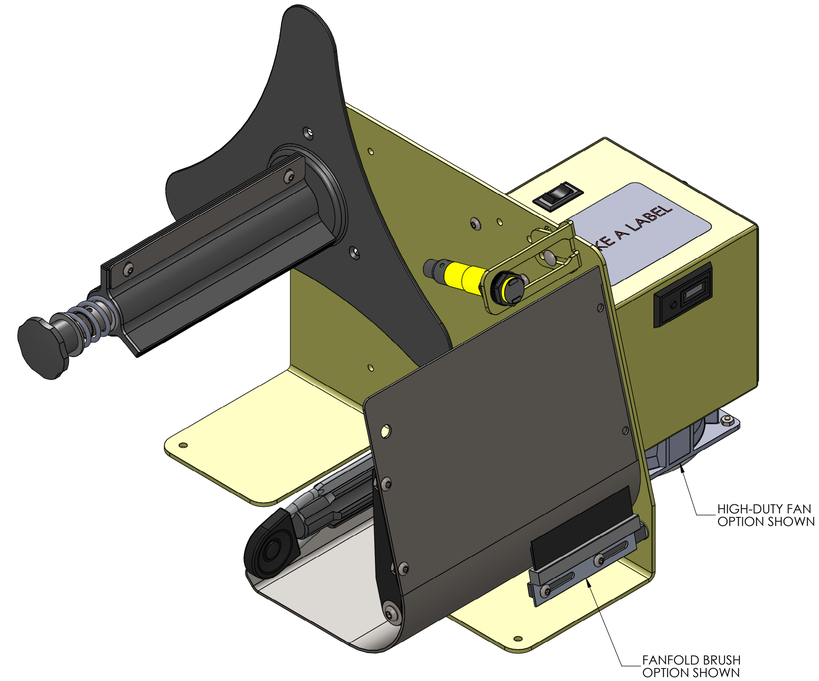

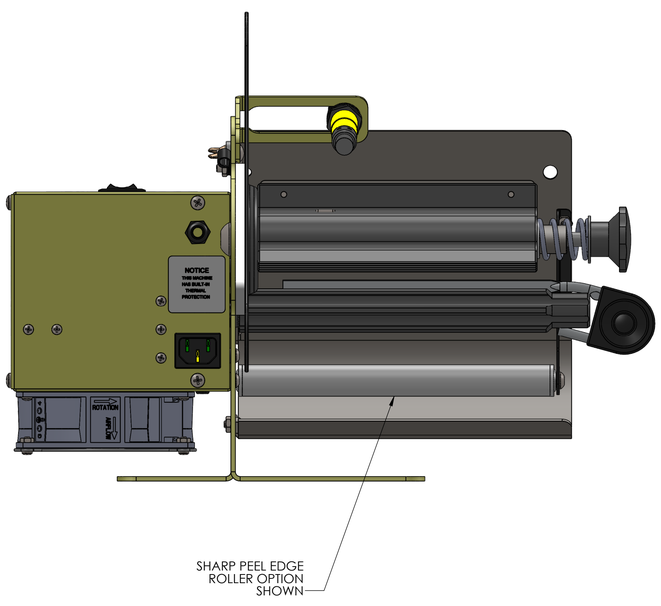

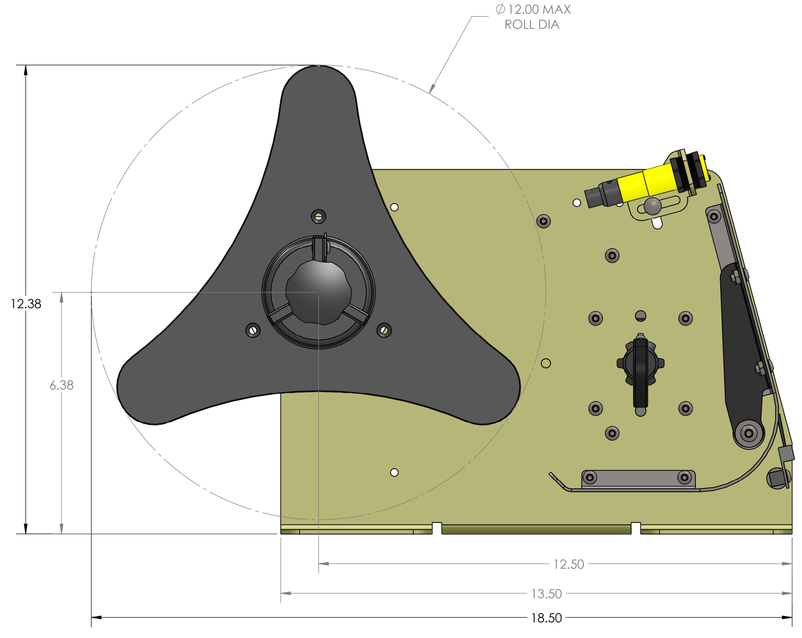

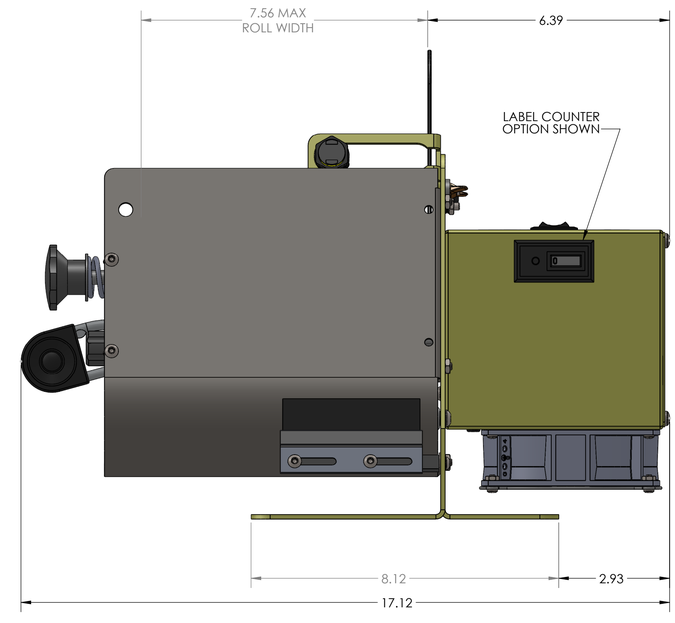

PROPRIETARY AND CONFIDENTIAL
THE INFORMATION CONTAINED IN THIS DRAWING IS THE SOLE PROPERTY OF TAKE-A-LABEL, INC. ANY REPRODUCTION IN PART OR AS A WHOLE WITHOUT THE WRITTEN PERMISSION OF TAKE-A-LABEL,INC. IS PROHIBITED.

REVISION #	DETAIL	APPLICATION

UNLESS OTHERWISE SPECIFIED:
DIMENSIONS ARE IN INCHES
TOLERANCES:
FRACTIONAL ±1/32
ANGULAR: MACH ±0.1 BEND ±0.5
TWO PLACE DECIMAL ±0.015
THREE PLACE DECIMAL ±0.005
INTERPRET GEOMETRIC TOLERANCING PER:
MATERIAL
FINISH

	NAME	DATE
DRAWN	RJS	8/30/18
CHECKED		
ENG APPR.		
MFG APPR.		
Q.A.		

COMMENTS:

TAKE A LABLE, INC.
NUNICA, MI WWW.TAKE-A-LABEL.COM

TITLE:

SIZE **D** DWG. NO. TAL 750 Label Dispenser outline only without microswitch option REV **0**

SCALE: 1:2 WEIGHT: SHEET 1 OF 1